SMART CABLE GUARD

Smart Cable Guard 3 Installation Manual

Document information:

Document title:	Smart Cable Guard 3 Installation Manual	DNV Netherlands B.V. Smart Cable Guard Utrechtseweg 310-B50 6812 AR Arnhem The Netherlands Tel: NL003104990B01
Date of last issue:	2025-09-17	
Document No.:	SCG-060-PM Rev2	
Revision No.:	Rev2	
SCG department	☒ Product Management ☐ Operations ☐ Sales and Marketing	

SCG review classification:	☒ E	☐ EC	☐ I	☒ -T	☐ X
Document classification	☒ Open	☐ DNV Restricted	☐ DNV Confidential* *(*list persons)*	☐ DNV Secret* *(*list persons)*	
Keywords:					

Rev. No.	Date	Reason for Issue	Prepared by	Verified by	Approved by
0	2024-06-21	First issue	FA		PW
1	2025-03-14	Second issue	JdB/MM	FA/RD	PW
2	2025-09-17	Third issue; Certification review	MM		PW

TABLE OF CONTENTS

1 INTRODUCTION 1
1.1 Intended use of equipment 1
1.2 Safety symbols and terms 1
1.3 Datasheets 1
1.4 General attention points 1
1.5 Required knowledge for installation 2
1.6 Contacting DNV 3

2 REQUIRED MATERIALS FOR INSTALLATION 4
2.1 Field processor overview 5
2.2 Signal monitor overview 7
2.3 Cable sensor overview 8

3 PHYSICAL INSTALLATION 9
3.1 Tools and mounting hardware 9

4 FIELD PROCESSOR INSTALLATION 10
4.1 Installing the SIM card in the Field processor 10
4.2 Installing the Field processor 11
4.3 Field processor installation check 12

5 SIGNAL MONITOR INSTALLATION 13
5.1 Installing the Signal monitor 13
5.2 Checking the Signal monitor installation 14

6 CABLE SENSOR INSTALLATION 15
6.1 Installing the Cable sensor 15

7 FINAL INSTALLATION CHECK 16
7.1 Checking the connection to SCG servers 16
7.2 Finishing the Installation 16

8 SERVER COMMUNICATION CONFIGURATION 17
8.1 Connecting a laptop to the Field processor 17
8.2 Network settings 18

9 MAINTENANCE 21
9.1 Required maintenance 21

10 TROUBLESHOOTING 22
10.1 No power supply to the system 22
10.2 The system is trying to communicate with the server 23
10.3 The system doesn't detect the system at the other side of the monitored cable 23
10.4 Internal error – continuous red LED 23
10.5 SCG Connector program shows the Field processor, but it won't open in the browser 24
10.6 Where to install the Cable sensor 24

APPENDIX A LAPTOP-FIELD PROCESSOR NETWORK SETTINGS 25

APPENDIX B INSTALLATION FORM 26

APPENDIX C FCC AND ISED DECLARATIONS 27

1 INTRODUCTION

1.1 Intended use of equipment

Smart Cable Guard is an advanced solution that accurately locates faults and weak spots in any kind of medium-voltage (MV) cable network. The hardware consists of cable sensors which are installed around the cable or earth lead of the cable-circuit. Each Cable sensor is connected to a Signal monitor, which in turn is connected to the Field processor. The Field processor performs analysis of measured signals, communicates the results to the server and provides the possibility to configure the system.

1.2 Safety symbols and terms

The following symbols and terms appear on the equipment or in the manual. The symbols and terms alert you to important safety considerations.

	This symbol warns of a potential risk of electrical shock
	This symbol is used to warn the user to be cautious and to refer to this manual for more instructions.
	This symbol is used to denote a protective earth (ground) connection.
	This symbol is used to denote a functional earth (ground) connection.
Attention	The **Attention** term indicates a potential hazard. It calls attention to a potential procedure, practice or condition which, if not followed, could possibly cause damage to the equipment, or could possibly cause bodily harm or death. If **Attention** is given, do not proceed until its conditions are fully understood and met.

Table 1 Safety symbols

1.3 Datasheets

For complete technical specifications of the Smart Cable Guard devices, please refer to the datasheets available at: www.dnv.com/scgdownloads.

- SCG-061-PM - Datasheet SCG3 Field Processor LTE-M
- SCG-062-PM - Datasheet SCG3 Signal Monitor
- SCG-063-PM - Datasheet SCG3 Cable Sensor

1.4 General attention points

Attention

This product contains live electrical components, heat-generating elements, and may store energy (e.g., in capacitors). Potential hazards include electric shock, burns, and injury from moving parts. Service must be carried out by qualified personnel only.

Attention

Do not use the equipment in a manner not specified by the manufacturer. Any incorrect use of the equipment could possibly result in damage to the equipment, bodily harm or death.

Attention

The Smart Cable Guard Field processor, Signal monitor and Cable sensor must be handled with care. Do not bump or drop any part of the equipment.

Attention

Do not replace the mains power cable by any cable other than specified by the manufacturer.

Attention

If the accompanying cables are damaged or their insulation is compromised, do not use them. Contact DNV and replace them with new, undamaged cables of the same specifications.

Attention

This equipment includes a Functional Earth (FE) terminal. It is not a Protective Earth (PE) terminal and must not be connected to hazardous voltages or used as a safety grounding point. Disconnecting the Protective Earth conductor or incorrectly connecting the Functional Earth terminal may result in hazardous touch voltages.

Attention

Verify that the voltage input matches the device specifications before powering on.

Attention

Information in this manual is subject to change without notice.

1.5 Required knowledge for installation

To install the Smart Cable Guard 3 equipment next to medium voltage cables, the following knowledge and skills are necessary:

- **Electrical Safety and Regulatory Compliance:** Understanding electrical safety protocols to work close to medium/high voltage, and relevant codes and standards to ensure safe and compliant installation.
- **Proper Use of Tools and Electrical Connections**: Proficiency in using drills and tools to install bolts and nuts securely, and skills in making secure and reliable electrical connections, including the use of appropriate connectors and tools.
- **Site Familiarity and Permissions:** Awareness of the specific installation site, obtaining necessary permissions, and adhering to site-specific requirements.
- **Cable Connections and Earthing:** Understanding the location and installation of the earthing system for safety.

- **Follow Installation Manual and Troubleshooting:** Ability to read and interpret installation manuals, technical drawings, and other documentation to perform testing, commissioning, and troubleshooting.
- **Functional Earth (FE) Terminal**: This terminal is not Protective Earth (PE) and must not be used for safety grounding or connected to hazardous voltages. Incorrect connection or disconnecting may lead to hazardous touch voltages.

1.6 Contacting DNV

For general information regarding Smart Cable Guard, visit www.dnv.com/scg.

For documentation regarding Smart Cable Guard, visit www.dnv.com/scgdownloads.

For questions during installation or the applications of Smart Cable Guard, send an email to scg-global@dnv.com.

2 REQUIRED MATERIALS FOR INSTALLATION

The Smart Cable Guard hardware works in pairs, one Field processor, one Signal monitor, and one Cable sensor must be installed at the start of the monitored cable, and one Field processor, one Signal monitor, and one Cable sensor must be installed at the end of the monitored cable. Each Field processor can be connected to up to 3 Signal monitors and Cable sensors, allowing it to monitor 3 different cables.

To install one set of Smart Cable Guard 3 the following materials are necessary:

- **Smart Cable Guard 3 devices:**



1 Field processor



1 to 3 Signal monitors



1 to 3 Cable sensors

- **Cables and accessories:**



1 to 3 Ethernet cables
with ix Industrial™ connectors



Grounding wires and terminals
for all devices



If applicable, Micro SIM card
(3FF)



1 triple cable cord with a C13
connector for AC power supply

or (depending
on the type of
power supply)



1 DC cord with a screw barrel
connector for DC power supply



1 antenna

or (depending
on the type of
connection
used)



1 Ethernet cable with
RJ45 connectors

Figure 1 Installation material

2.1 Field processor overview

For complete technical specifications of the Field processor, please refer to the datasheet available at: www.dnv.com/scgdownloads (SCG-061-PM - Datasheet SCG3 Field Processor LTE-M).

An overview of the Field processor and all its parts are shown in Figure 2.



Figure 2 Overview of the Field processor

The individual parts shown in Figure 2 are:

1. Label with unique identification (ID) number and QR code[1]
2. AC input connection socket (100-240 Vac)
3. DC input connector (12 Vdc)
4. Ix Industrial™ connector of Signal monitor port 1
5. Signal monitor status LED indicator port 1
6. Reset button, to perform a soft or hard reset of the Field processor
7. Status LED indicator for server communication
8. USB connector for firmware updates
9. Wired local-area-network (LAN) connection for configuration via laptop and (optionally) to connect to the SCG platform
10. SIM card slot with bolted cover
11. Antenna connector for mobile data connection
12. Protective earth connection (size M6)

[1] This QR-code directs to the SCG platform device information

2.1.1 Field processor interfaces (LEDs and button)

This section explains the functions of Field processor interfaces:

2.1.1.1 LED Status indicator of Signal monitor (item 5 in Figure 2)

The Field processor has an individual LED indicator that shows the status of each Signal monitor connected to it. The LED status follows the patterns in the table below:

LED indication	Status
Off	No connection with the Signal monitor.
Green blinking	The Signal monitor is connected, but it is not in sync with its partner at the other end of the monitored cable.
Green continuously on	Cable Sensor is connected and in sync with its partner at the other end of the circuit-under-test.
Green/orange blinking	Signal monitor firmware is being updated. Do not disconnect or power off the Signal monitor while this is happening. The Signal monitor firmware update lasts a maximum of 1 minute.
Orange/red blinking	System is starting up (all LEDs are blinking orange/red).
Red continuously on	Signal monitor reports an internal error.

Table 2 Signal monitor status LED indicator

2.1.1.2 LED Status indicator of connection to SCG Servers (item 7 in Figure 2)

The Field processor has an LED indicator of the connection to Smart Cable Guard's servers that follows the patterns in the table below:

LED indication	Status
Off	The Field processor is switched off; it has no input power.
Green blinking	Trying to connect to the server.
Green continuously on	Successful connection with the server.
Orange/red blinking	System is starting up (all LEDs are blinking orange/red).
Red continuously on	Field processor encountered an internal error (e.g. an incorrect PIN code).

Table 3 Server connection status LED indicator

2.1.1.3 Reset button

The reset button has two functions, as described on the table below:

Function	Action	Description
Soft reset	Short press (<5 seconds)	Gracefully shuts down the firmware in the Field processor and reboots it afterwards.
Hard reset	Press and hold the reset button for 6 seconds	Instantly terminates the firmware execution on the Field Processor and initiates a system reboot. **There is a small chance that files on the Field processor become corrupt when a hard reset is performed. Therefore, use the hard reset only as the last resort if the soft reset doesn't work**.

Table 4 Reset button functions

2.2 Signal monitor overview

For complete technical specifications of the Signal monitor, please refer to the datasheet available at: www.dnv.com/scgdownloads (SCG-062-PM - Datasheet SCG3 Signal Monitor).

An overview of the Signal monitor and all its parts is shown in Figure 3.



Figure 3 Overview of the Signal monitor

The individual parts shown in the figure are:

1. Label with unique identification (ID) number
2. Protective earth connection (size M6)
3. ix Industrial™ connector for the cable to the Field processor
4. Power indicator of Signal monitor
5. M12 connector to Cable Sensor

2.2.1 Signal monitor interface (LED)

This section explains the functions of the Signal monitor interfaces:

2.2.1.1 LED power indicator of Signal monitor (item 4 in Figure 3)

The Field processor has an LED that indicates if power is being supplied to it, follows the patterns in the table below:

LED indication	Status
Off	Signal monitor is not powered
Green	Signal monitor is powered

Table 5 Signal monitor power indicator

2.3 Cable sensor overview

For complete technical specifications of the Cable sensor, please refer to the datasheet available at: www.dnv.com/scgdownloads (SCG-063-PM - Datasheet SCG3 Cable Sensor).

An overview of the Cable sensor and all its parts is shown in Figure 4.



Figure 4 Overview of the Cable sensor

The individual parts shown in the figure are:

1. Cable sensor aperture with insulation
2. Locking mechanism to close the Cable sensor
3. Hinge
4. Label with ID number
5. 10 feet Cable with M12 connector to connect to SCG Signal monitor
6. Functional earth connection (size T30)
7. Hole to thread for eye bolt or another mounting fixture

Remark: The mounting hole is not threaded out-of-the-box, threads must be tapped before a bolt can be screwed in.

3 PHYSICAL INSTALLATION

This section describes the physical installation of the Smart Cable Guard system on the cable to be monitored.

3.1 Tools and mounting hardware

The tools and hardware necessary for the installation are listed below:



Mounting hardware: nuts and bolts for 1/8” (3.2 mm) slots

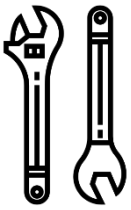

M6 wrench for grounding bolts

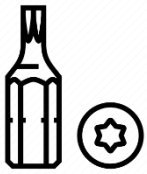

T10 and T30 Torx L-key or screwdriver

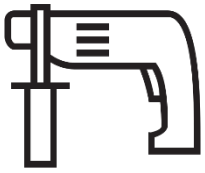

Tools to prepare the mounting surface (e.g. drill)

Figure 5 Tools and mounting hardware

Optional: a tap to cut a thread in the mounting hole of the sensor (size M5: UNC 8-40 / 4.2 mm).

4 FIELD PROCESSOR INSTALLATION

This Section describes the steps to install the Field processor.

The factory-default communication method of the Smart Cable Guard system is through a mobile wireless connection (LTE-M) with a SIM card provided by DNV. If this is the method used, the first step of the installation process is to insert the SIM card provided with the equipment. If a different communication method is chosen (LAN or a different mobile connectivity provider), see the configuration steps in Section 8.

Attention

The intended accessories for the Field processor are Signal monitors. Use of any other accessories may cause malfunctions or pose a hazard.

Attention

The Field Processor is intended for indoor use only. For outdoor use, additional enclosure is required.

Attention

Do not install the device if the insulation on the unit or cable is compromised.

4.1 Installing the SIM card in the Field processor

1. Make sure that the power cable is disconnected from the Field processor.

Attention

To avoid electrical shock, disconnect the power cable from the Field processor before opening the SIM card slot cover.

Attention

Directly after disconnecting the power cable the internal UPS is still charged to a voltage of 12 volts. To prevent permanent damage to the device, prevent short-circuiting any internal parts of the Field processor. Wait until the status LED (item 7 in Figure 2) is off, before opening/accessing the device.

2. Loosen the bottom right screw using a Torx 10 screwdriver, marked in red in Figure 6 **(**left). Then slightly loosen the top left screw to allow the cover to slide sideways, marked in blue in Figure 6 **(**left).
3. Slide the cover to the side so that a SIM card can be installed. As shown in Figure 6.
4. Push the Micro SIM (3FF) card into the SIM card slot with the metal contacts facing down, diagonally cut-out to the left, and make sure that it is fully inserted. As shown in Figure 6 **(**right).
5. Slide the SIM cover back in the original position on the Field Processor and tighten the two screws using a Torx 10 screwdriver.



Figure 6 SIM card installation procedure

Attention

Ensure that the bolts are inserted and fixed so no water can enter via the SIM card slot cover of the Field processor

4.2 Installing the Field processor

1. The Field processor has two mounting flanges, one on each side. The Field processor must be mounted on a vertical wall or rack using the following steps:

    a. Identify a suitable vertical surface (for example a wall or rack) for mounting the Field processor. The surface must be sufficiently strong to support the Field processor.

    b. Drill two holes (or otherwise prepare suitable fixation points) for the two mounting flanges of the Field processors. The width of the slots on the mounting flanges is 1/8" (3.2 mm). These holes must have distances as indicated in the figure below:

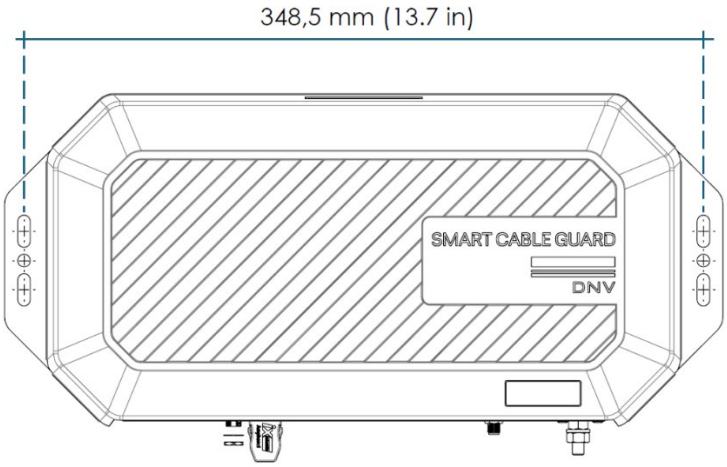

Figure 7 Location of Field processor's mounting holes

    c. Use two bolts to mount the two mounting flanges into the drilled holes. The front panel (with the connectors) of the Field processor must be facing down.

    Remark: The Field processor must be mounted vertically with the connectors facing down to avoid dust and water entry.

2. Connect the protective earth of the Field processor to ground with a copper wire of at least 14 AWG or 2.5 mm^2.

Attention

To avoid the risk of electrical shock, connect the protective earth of the Field processor to ground.

3. If the Field processor is configured to use the mobile data connection for server communication, then connect the antenna to the Field processor. Position the antenna in a manner that it is not in contact with other metal parts in the station.
4. If the Field processor is configured to use the wired LAN connection for server communication, then use a category (cat.) 5 (or better) network cable to connect the Field processor to an Ethernet wall socket with network access.
5. Connect the power cable to the Field processor and plug it in the power source.

   Remark: After installation, the power cable must remain easily accessible to allow for device disconnection.

4.3 Field processor installation check

1. When the system is powered, after approximately 30 seconds all the LEDs on the Field processor will start blinking orange/red, indicating that it is booting up. This process can take up to 5 minutes. If this does not happen, go to Section 10 for troubleshooting.
2. When the startup process is finished, the LED Status indicator of connection to SCG Servers (item 7 in Figure 2) will show a blinking green or solid green light.

   If there is no blinking green or solid light, go to Section 10 for troubleshooting before continuing the installation!

Note: When using a SIM card this process can take up to one hour after powering the Field processor for the first time.

5 SIGNAL MONITOR INSTALLATION

This Section describes the steps to install the Signal monitor.

Attention

The intended accessory for the Signal monitor is the Cable sensor. Use of any other accessories may cause malfunctions or pose a hazard.

Attention

The Signal monitor is intended for indoor use only. For outdoor use, additional enclosure is required.

Attention

Do not install the device if the insulation on the unit or cable is compromised.

5.1 Installing the Signal monitor

1. The Signal monitor has two mounting flanges, one on each side. The Signal monitor must be mounted on a vertical wall or rack using the following steps:

    a. Identify a suitable vertical surface (for example a wall or rack) for mounting the Signal monitor. The surface must be sufficiently strong to support the Signal monitor. It weighs approximately 14.4 ounces (409 grams).

    b. Drill two holes (or otherwise prepare suitable fixation points) for the two mounting flanges of the Signal Monitor. The width of the slots on the mounting flanges is 1/8” (3.2 mm). These holes must have distances as indicated in the figure below:

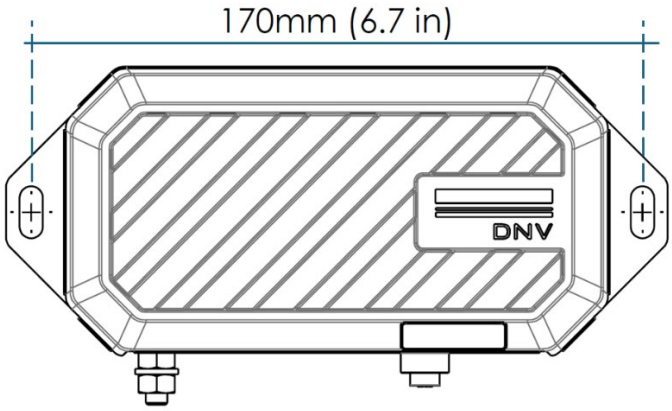

Figure 8 Location of Signal monitor’s mounting holes

    c. Use two bolts to mount the two mounting flanges into the drilled holes. The front panel (with the connectors) of the Signal monitor must be facing down.

    Remark: The Signal monitor must be mounted vertically with the connectors facing down to avoid dust and water entry.

2. Connect the protective earth of the Signal monitor to ground with a copper wire of at least 14 AWG or 2.5 mm^2.

Attention

To avoid the risk of electrical shock, connect the protective earth of the Field processor to ground.

3. Connect ix Industrial™ cable from the Signal monitor to one of the ix Industrial™ ports of the Field processor.

5.2 Checking the Signal monitor installation

1. After the Signal monitor is connected to the Field processor, the status LEDs must show:
    a. On the Signal monitor, the LED power indicator (item 4 in Figure 3) will show a solid green light.
    b. On the Field processor, the LED Status indicator of Signal monitor (item 6 in Figure 2) will show a green blinking or solid green light (see table 2, page 5)
2. If more than one Cable sensor is used with the Field processor, repeat the process of the installation with the other Cable sensors.

6 CABLE SENSOR INSTALLATION

This Section describes the steps to install the Cable sensor.

Attention

The Cable sensor is suitable for use in indoor and outdoor environments.

Attention

Do not install the device if the insulation on the unit or cable is compromised.

6.1 Installing the Cable sensor

1. The Cable sensor has a hinge so that it can be clamped around a cable or earth lead. Unlock the mechanism (2 in Figure 4) and separate the two halves.
2. Clamp the two Cable sensor halves around the cable or earth lead at the correct location.
3. Secure the locking mechanism, ensuring it is fully locked.
4. (Optional) By screwing in an eye bolt (size M5 - UNC 8-40 / 4.2 mm) in the mounting hole (item 7 on Figure 4), the Cable sensor can be attached.

   Remark: The mounting hole is not threaded out-of-the-box, threads must be tapped before a bolt can be screwed in.
5. Connect the earth of the Cable sensor to ground with a copper wire of at least 14 AWG or 2.5 mm^2 using a T30 Torx screwdriver.
6. Connect the M12 connector at the end of the Cable sensor's fixed cable to the M12 connector on the Signal monitor.
7. If more than one Cable sensor is used with the Field processor, repeat the process of the installation with the other Cable sensors.

7 FINAL INSTALLATION CHECK

After finishing the installation of the Field processor, all Signal monitors, and all Cable sensors, the next step is to check the connection of the Field processor to Smart Cable Guard server.

7.1 Checking the connection to SCG servers

When a successful connection is established, the LED Status indicator of connection to SCG Servers (item 7 in Figure 2) will show a solid green light. And the LED of all connected Signal monitors (item 5 in Figure 2) show a blinking green light.

Congratulations! The Smart Cable Guard system is successfully installed on one side of the cable to be monitored. After the first side of the installation is ready, repeat the process, starting on Section 3, on the other end of the monitored cable.

7.2 Finishing the Installation

The Smart Cable Guard system is now successfully installed. Complete the installation form (example provided in APPENDIX B) provided by Smart Cable Guard operations team with the circuit information. Send the completed form to the DNV Smart Cable Guard operator (scg-global@dnv.com) to perform to perform the synchronization of both sensors and enter the monitored cable on the Smart Cable Guard website (https://scg.dnv.com).

After successful synchronization of the sensors at both sides of the cable the status LED indicator of the connected Signal monitor (item 5 in Figure 2) will show a solid green light.

8 SERVER COMMUNICATION CONFIGURATION

This section describes the configuration steps for the setup of the Smart Cable Guard system including connection to the Field processor and modem/network configuration. Required are:

- A (laptop) computer with at least Windows 10 with an ethernet port (RJ45) available
- The latest version of an internet browser (Edge, Firefox or Chrome)
- An Ethernet cable to connect a laptop to the Field processor
- The SCG Connector app; this will be provided by DNV contact or can be found on www.dnv.com/scgdownloads

Note with the Internet protocol TCP/IP of the used network adapter, the following options can be selected: "Obtain an IP address automatically" and "Automatic private IP address". These are the Windows default options. If not, please contact your local network administrator.

8.1 Connecting a laptop to the Field processor

Use the following steps to connect a laptop to the Field processor using a network cable:

1. Locate the LAN port on the Field processor. In Figure 2, the LAN port is labelled with number 9.
2. Disable the Wi-Fi connection for wireless networks on the laptop being used. For networking details of connection between laptop and Field processor, see APPENDIX A.
3. Insert one end of network cable in the LAN port.
4. Insert the other end of the network cable in the network port of the laptop.

After the laptop is connected to the Field processor, use the following configuration steps to access the configuration interface of the Field processor:

1. Locate the SCG Connector app on the laptop and start it. The program interface is shown in Figure 9.
2. If the Field Processor is already connected, it will be shown on screen. If not, simply press the button “Restart Discovery”.



Figure 9 Interface of SCG Connector

3. Click “Open in browser”, then the web browser will start with the configuration interface.
4. The Smart Cable Guard login screen is as shown in Figure 10.
5. To log in, use the username and password provided by DNV.

6. Press Submit.

In case the SCG Connector does not find the Field processor, then see section APPENDIX A for technical details on networking.

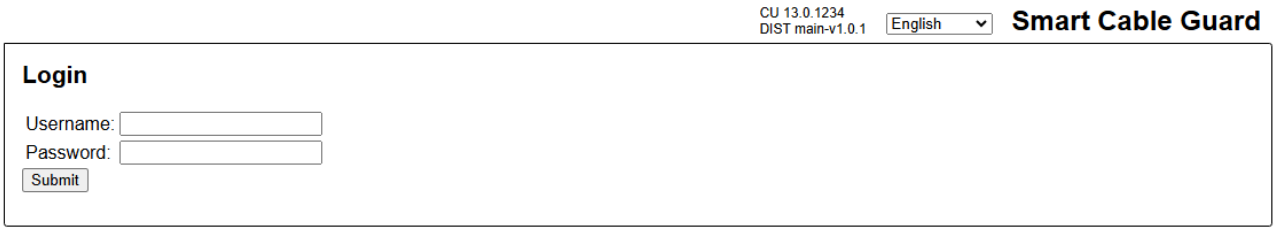

Figure 10 Login screen

8.2 Network settings

After Field processor identification is complete, the next step is the network settings. This step is necessary so that the Field processor can establish a proper connection to Smart Cable Guard's servers. It is important to decide whether a mobile data (LTE-M) or a LAN connection will be used for communication between the Field Processor and the server before making changes to these settings.

8.2.1 Configuring the mobile data connection

To configure the system using a mobile data connection, Follow these steps:

1. Select the tab 'Network".
2. The network interface must be selected as "Cellular" (See Figure 11).
3. Enter the network settings of the service provider and the PIN code of the SIM card under the "Mobile network settings" section (see red box in Figure 11). Enter Mobile network APN: "scg.m2m".
4. The server address and port number should be requested from DNV. For most situations, the default values will be correct. If the server address is changed, it might take up to 3 minutes to establish a connection with the new server.
5. After entering the relevant information, click Save.
6. Perform a soft rest by pressing the reset button (identified as 6 on the Field processor in Figure 2) for 1 second. It will take about 3 minutes to reboot the system.

To check if the Field processor is communicating after performing soft reset, the Status LED Status indicator of connection to SCG Servers (item 7 in Figure 1) for server communication on the Field processor should be constant green (this may take up to 3 minutes after the soft reset); or you can login and check on Network Status.

When using a SIM card, the process of establishing a connection for the first time can take up to one hour after powering the Field processor.

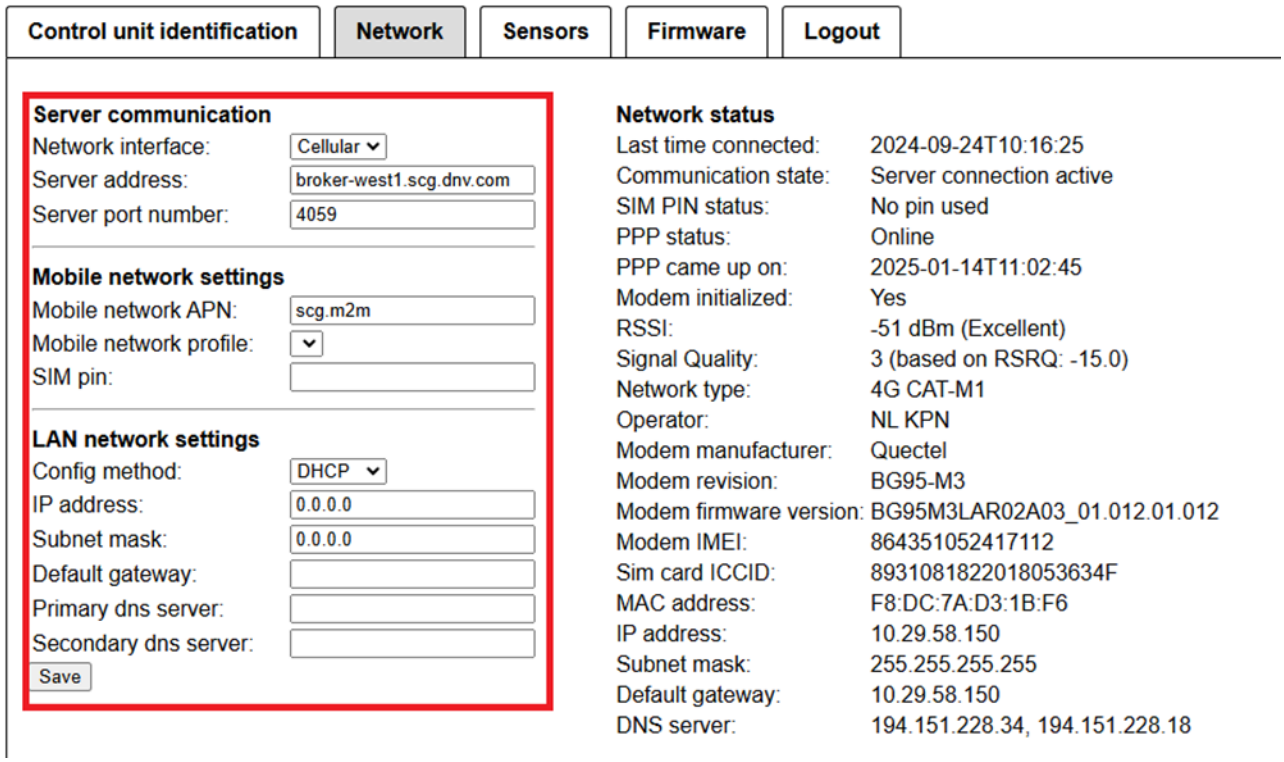

Figure 11 The Network settings, status, and Mobile Network Profile.

8.2.2 Wired LAN connection

If a wired LAN connection is to be used for communication in the server, use the steps described below:

1. To get the Field processor communicating via the LAN network, the network interface should be selected as “LAN” (see orange mark in Figure 12).
2. If DHCP is selected in the “LAN network settings” section’s drop-down menu, then appropriate information is filled by default (see red box in Figure 12).
3. The server address and port number should be requested from DNV. For most situations, the default values will be correct. If the server address is changed, it might take up to 3 minutes to establish a connection with the new server.
4. If “Static” is selected in the “LAN network settings” section’s drop-down menu, then enter the appropriate IP address and subnet mask values. This should be in accordance with the local network provider.
5. After entering the information, click Save.
6. Perform a soft rest by pressing the reset button (identified as 11 on the Field processor in Figure 2) for 1 second. It will take about 3 minutes to reboot the system.

To check if the Field processor is communicating after performing the soft reset, you can look at the Status LED Status indicator of connection to SCG Servers (item 7 in Figure 1) for server communication on the Field processor should be constant green (this may take up to 3 minutes after the soft reset); or you can login and check on Network Status

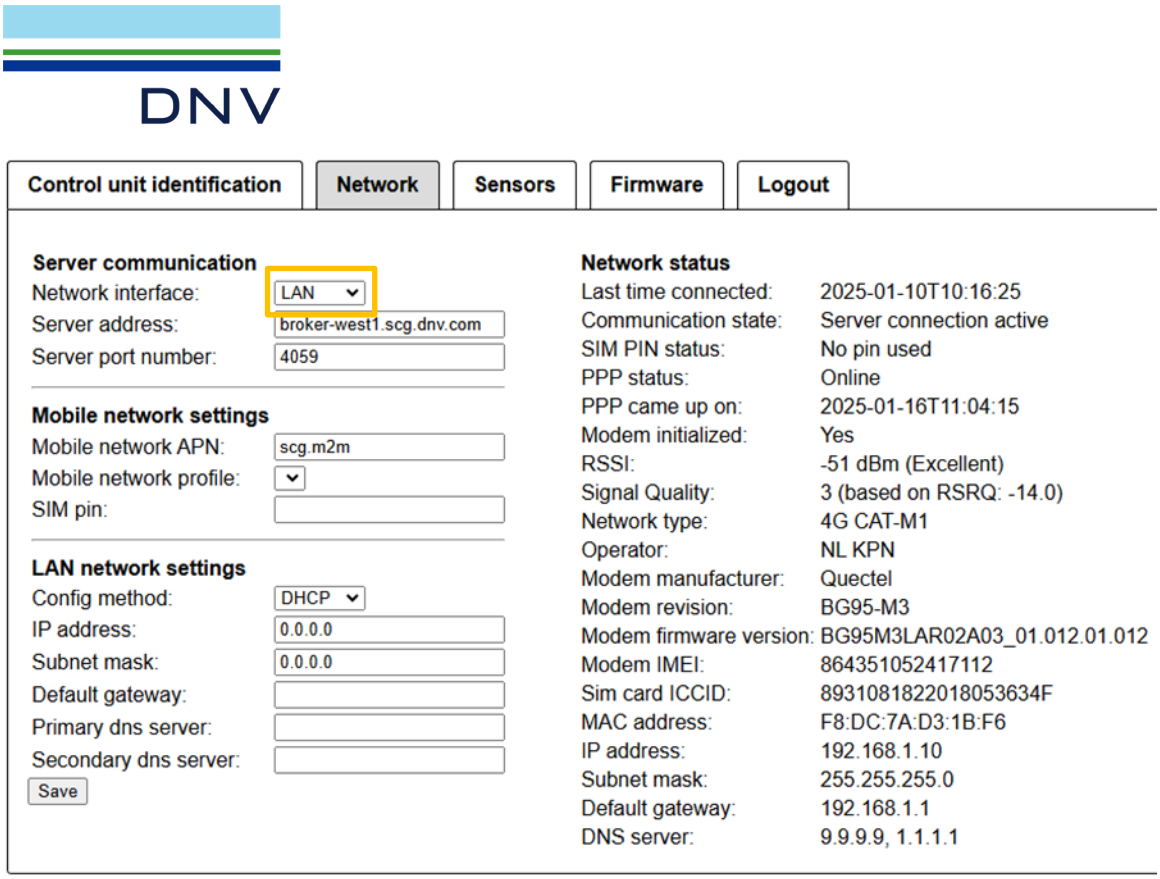

Figure 12 The Network settings and status from the LAN connection

9 MAINTENANCE

9.1 Required maintenance

The following maintenance actions are required to ensure proper operation:

If a layer of dust settles on the equipment, then remove the dust to prevent overheating of the equipment.

The general instructions to be followed while cleaning the equipment are presented below:

1 Disconnect the power cable from the Field processor

Attention

To avoid electrical shock, disconnect the power cable from the equipment before cleaning the equipment. Please wait until the UPS has been fully discharged. This can be verified by observing the LED indicators — they will be turned off

2 Clean only the exterior of the equipment using soap and water on a damp, soft cloth.

3 Do not allow moisture to penetrate the equipment.

4 Do not submerge the equipment in water.

5 Do not use abrasive cleaners.

10 TROUBLESHOOTING

Most problems with the Smart Cable Guard installation can be diagnosed effectively with the help of the status indicator LEDs on the Field processor. These LEDs indicate the status of the Signal monitor and server communication, as presented in Figure 2.

An overview of the same is presented below:

LED STATUS	EXPLANATION	TROUBLESHOOTING STEPS
Server status LED: Off	No power supply	See section 10.1
Server status LED: Green blinking	System is trying to connect to the server	See section 10.2
Signal monitor status LED: Green blinking	Signal monitor has no sync with partner at the other end of the monitored cable	See section 10.3
Server status led: Red continuously on	Internal error	See sections 10.4

Table 6 Field processor LED status indicator

Other known problems are:

PROBLEM	TROUBLESHOOTING STEPS
SCG Connector program shows the Field processor, but it won't open in the browser	See section 10.5
Common Cable sensor placements mistakes	See section 10.6

Table 7 Known problem

10.1 No power supply to the system

An interruption to the power supply will not display the LED in the Field processor or the Signal monitor. Use the following steps to resolve this:

1. Wait 10 seconds to see if the LED turns on. When Field processor is powered on after being off for a long time, it will take a few seconds to charge its internal UPS before the system starts up.
2. Check for a loose connection of the power supply cord to the Field processor.
3. Check for an interruption in the grid power supply.
4. Check for damage on the lead of the power supply cord for the Field processor.

10.2 The system is trying to communicate with the server

When the SCG system does not communicate with the server, it is usually due to the following issues:

1. SIM card errors (when mobile data communication is used):
   (a) The SIM card has not been mounted in the modem properly. Remove and replace the SIM card by following section Figure 6.
   (b) The SIM card settings are not entered or not entered correctly and saved. Check the settings from section Figure 6.
   (c) The Local SIM card subscription has expired or has been terminated otherwise. Contact the SIM card provider and check that there is a valid subscription for the SIM card used.
2. Antenna errors (when mobile data communication is used):
   a. The antenna is not connected properly to the Field processor and leads to no communication. Check if the antenna is installed on the system as per installation instructions in section Figure 2, point 4 and is properly tightened to the magnetic base of the antenna.
   b. The signal of the antenna is being blocked due to the construction of the site where the monitored cable is installed or due to an external barrier or remote location of the transmission tower. Check the surroundings of the circuit-to-be-monitored and the cellular reception strength in the area with the station door closed.
   c. Perform a soft reset by a short press on the reset button of the Field processor
3. LAN connection errors (when LAN data communication is used)

   The LAN connection is not working properly. Verify if the LAN cable is connected to a working internet connection.

10.3 The system doesn’t detect the system at the other side of the monitored cable

The system may not be able to detect the system at the other side of the monitored cable due to a loss of synchronization between them: This can happen due to several reasons. Contact the Smart Cable Guard team for assistance.

10.4 Internal error – continuous red LED

If the status LED is continuously red that means that the system has an internal error.

1. Wait for 5 minutes to see if the red LED remains. The system will try to recover automatically from internal errors.
2. Restart the system by a soft-reset by short-pressing the reset button (labelled number 6 in Figure 2).
3. Login to the Field processor’s web interface and check for any error messages on the Network page.

10.5 SCG Connector program shows the Field processor, but it won't open in the browser

The SCG Connector program successfully finds the Field processor. But when clicking "Open in browser" the web browser fails to open the Field processor's configuration interface. This can happen if the field processor and laptop are on different networks. This can be solved following these steps:

1. Make sure that the laptop is directly connected to the Field processor via a network cable. Both Field processor and laptop must not be connected to any other network
2. Disable the Wi-Fi connection on the laptop
3. Restart the Field processor
4. Restart the laptop
5. Open the SCG Connector program and click "Find Field processors"
6. Select the Field processor in the list and click "Open in browser"

10.6 Where to install the Cable sensor

There are separate guidelines for installing the Cable sensor. Please contact DNV (scg-global@dnv.com) for more information.

The Cable sensor must be installed either around the earth connection, or around the cable itself. When installing around the cable, make sure that the position of the Cable sensor relative to the cable earth connection is correct. For optimal noise reduction, make sure that the casing of the Cable sensor does not touch other earthed parts in the station.

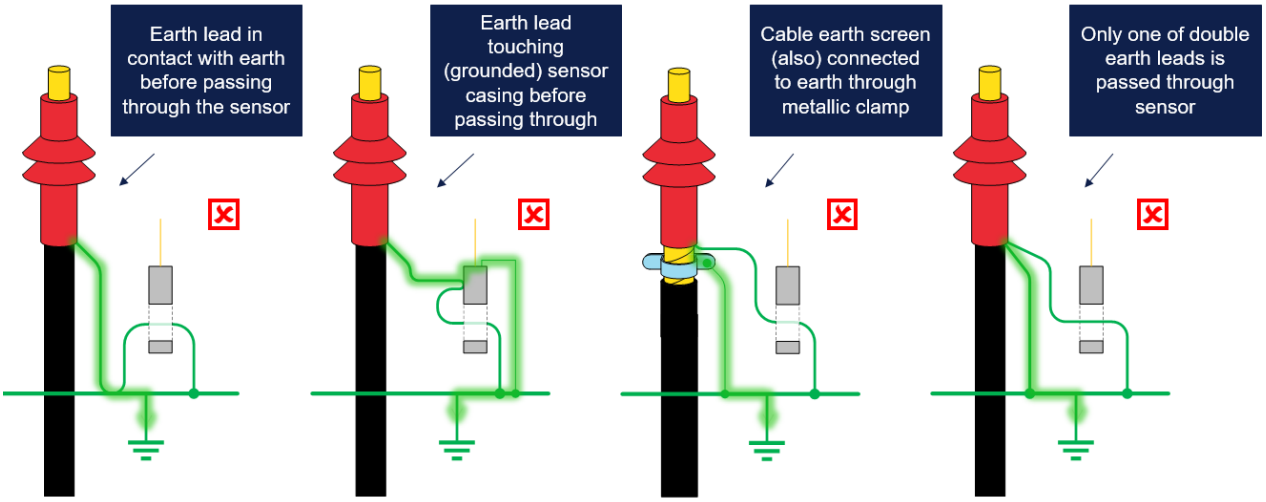

Figure 13 Common errors in Cable sensor placement.

APPENDIX A LAPTOP-FIELD PROCESSOR NETWORK SETTINGS

Remark: Please ask your IT department for assistance.

When a laptop is directly connected to the Field processor there is no DHCP server that will hand out IP-addresses. The Field processor will automatically assign itself a random address from the link-local range (169.254.0.0/16) (https://en.wikipedia.org/wiki/Link-local_address). The laptop must also pick an address from this range. This is the standard configuration for most operating systems. In Windows ensure that the Internet protocol TCP/IP of the used network adapter has the following options selected: "Obtain an IP address automatically" and "Automatic private IP address". These are the Windows default options.

When both the Field processor and laptop have an address from the same range, the laptop must determine the IP address of the Field processor. The Field processor will respond to Multicast DNS (mDNS) (https://en.wikipedia.org/wiki/Multicast_DNS) requests. The SCG Connect app (contact your DNV contact) will perform these requests. For this, the firewall on the laptop must allow the following connection:

1. Outbound request from laptop to Field processor:
    (a) Protocol: UDP
    (b) Source IP: 169.254.0.0/16 (laptop's own IP address)
    (c) Source port: any
    (d) Destination IP: 224.0.0.251
    (e) Destination port: 5353

A stateful firewall, such as the standard Windows firewall, will automatically allow the reply from the Field processor to the laptop. If the firewall does not automatically allow the response, then the following rule must be added.

2. Inbound answer from Field processor to laptop:
    (a) Protocol: UDP
    (b) Source IP: 169.254.0.0/16 (any address in 169.254.*.* range)
    (c) Source port: 5353
    (d) Destination IP: 224.0.0.251
    (e) Destination port: 5353.

APPENDIX B INSTALLATION FORM

Commissioning Information Smart Cable Guard 3

When completed, please sent to: SCG-Global@dnv.com

Pad/Manhole/Pole/Substation installation

Feeder information	
Customer Name	
Feeder number	
Region	

Start of monitored Circuit	
City / Area	
Name	
Pad/Manhole/Pole/Substation ID	
SCG Field processor ID	
SCG Signal monitor ID	

End of monitored Circuit	
City / Area	
Name	
Pad/Manhole/Pole/Substation ID	
SCG Field processor ID	
SCG Signal monitor ID	

Other Observations/Remarks

Checked & verified by:

_____

Name: **Date:**

APPENDIX C FCC AND ISED DECLARATIONS

Compliance statement (part 15.19)

This device complies with part 15 of the FCC Rules and to RSS of Industry Canada.
Operation is subject to the following two conditions:

1. this device may not cause harmful interference, and
2. this device must accept any interference received, including interference that may cause undesired operation.

Le présent appareil est conforme aux CNR d'Industrie Canada applicables aux appareils radio exempts de licence. L'exploitation est autorisée aux deux conditions suivantes : (1) l'appareil ne doit pas produire de brouillage, et (2) l'utilisateur de l'appareil doit accepter tout brouillage radioélectrique subi, même si le brouillage est susceptible d'en compromettre le fonctionnement.

Warning (part 15.21)

Changes or modifications not expressly approved by the party responsible for compliance could void the user's authority to operate the equipment.

Information to the User (Part 15.105 (b))

Note: This equipment has been tested and found to comply with the limits for a Class B digital device, pursuant to part 15 of the FCC Rules. These limits are designed to provide reasonable protection against harmful interference in a residential installation. This equipment generates, uses and can radiate radio frequency energy and, if not installed and used in accordance with the instructions, may cause harmful interference to radio communications. However, there is no guarantee that interference will not occur in a particular installation. If this equipment does cause harmful interference to radio or television reception, which can be determined by turning the equipment off and on, the user is encouraged to try to correct the interference by one or more of the following measures:

- Reorient or relocate the receiving antenna.
- Increase the separation between the equipment and receiver.
- Connect the equipment into an outlet on a circuit different from that to which the receiver is connected.
- Consult the dealer or an experienced radio/TV technician for help.

This Class B digital apparatus complies with Canadian ICES-003.
Cet appareil numérique de Classe B est conforme à la norme Canadienne ICES-003.

To comply with FCC and Industry Canada RF radiation exposure limits for general population, the antenna(s) used for this transmitter must be installed such that a minimum separation distance of 20 cm is maintained between the radiator (antenna) and all persons at all times and must not be co-located or operating in conjunction with any other antenna or transmitter.

This device contains license-exempt transmitter(s)/receiver(s) that comply with Innovation, Science and Economic Development Canada's license-exempt RSS(s). Operation is subject to the following two conditions:

1. This device may not cause interference,
2. This device must accept any interference, including interference that may cause undesired operation of the device

L'émetteur/récepteur exempt de licence contenu dans le présent appareil est conforme aux CNR d'Innovation, Sciences et Développement économique Canada applicables aux appareils radio exempts de licence. L'exploitation est autorisée aux deux conditions suivantes:

1. L'appareil ne doit pas produire de brouillage,
2. L'appareil doit accepter tout brouillage radioélectrique subi, même si le brouillage est susceptible d'en compromettre le fonctionnement.

About DNV

DNV is the independent expert in risk management and assurance, operating in more than 100 countries. Through its broad experience and deep expertise DNV advances safety and sustainable performance, sets industry benchmarks, and inspires and invents solutions.

Whether assessing a new ship design, optimizing the performance of a wind farm, analyzing sensor data from a gas pipeline or certifying a food company's supply chain, DNV enables its customers and their stakeholders to make critical decisions with confidence.

Driven by its purpose, to safeguard life, property, and the environment, DNV helps tackle the challenges and global transformations facing its customers and the world today and is a trusted voice for many of the world's most successful and forward-thinking companies.